Electrolux PROFESSIONAL

Digital Undercounter ecostore HP Premium Refrigerated Counter - 440lt, 3-Door on wheels and with UK plug

ITEM #

MODEL #

NAME #

SIS #

AIA #



712692 (EHR3BLS) 3-door Refrigerated Counter 440lt, Saladette with cut-out for containers, -2+10°C, AISI 304, with wheels - UK plug

Short Form Specification

Item No.

AISI 304 stainless steel panels, AISI 430 bottom panel, galvanized back panel. Worktop thickness 50mm, fitted with cut-out for n. 6 GN 1/3 containers (not included) and stainless steel lid. N. 3 full doors. Built-in refrigeration unit. Operating temperature: -2+10°C. R290 gas in refrigeration circuit. Supplied with 1 grid for each door compartment

Main Features

- Preservation performances and temperature uniformity within the cell guaranteed at 5-HEAVY DUTY (40°C) working conditions according to EN16825:2016 test protocol.
- Adjustable temperature range from -2 °C to +10 °C to suit meat, fish and dairy storage requirements.
- 0mm clearance installation space: tower configuration cooling unit guarantee performance with frontal ventilation only; this unique solution allows installation against the wall or side by side with other appliances, even on the cooling unit side to maxim
- Combination of doors and drawers to suit any configuration needed, with the possibility to change the configuration on site. Right cooling unit available on request.
- Fully removable cooling unit to facilitate maintenance.
- Frontal and easy access to all components in the cooling unit.
- Anti-tilt runners accept GN 1/1 containers.
- Self closing stainless steel doors (< 90°).
- Certified safety CE requirements.
- Internal structure with numerous charging positions available to host grids, ensuring higher net capacity and a greater storage space.
- Tropicalized unit.

APPROVAL:

Electrolux PROFESSIONAL

Digital Undercounter ecostore HP Premium Refrigerated Counter - 440lt, 3-Door on wheels and with UK plug

Construction

- 3 compartments with 3 doors.
- Worktop in AISI 304 Stainless steel with a 50 mm profile.
- If needed, working top can be removed for easier handling during installation (in case of narrow doors).
- Anti-drip profile on stainless steel worktop edge.
- Interior base with rounded corners, pressed from a single sheet.
- Ease of cleaning and high hygiene standards thanks to the rounded internal corners, the easily removable runners, grids and air conveyors.
- Internal structure with 15 charging positions (3 cm pitch) available to host GN 1/1 grids, ensuring higher net capacity and a greater storage space.
- Internal and external doors, front and side panels and removable worktop in AISI 304 Stainless steel.
- Built-in refrigeration unit.
- Developed and produced in ISO 9001 and ISO 14001 certified factory.
- Fault code display.
- Built-in compressor to suit operating conditions.
- External bottom panel in stainless steel.
- External back panel in galvanized steel.

User Interface & Data Management

- Large digital white-digit display with humidity selection button (3 preset level), internal temperature display and setting, manual activation of defrost cycle and turbo frost cycle (to rapidly cool warm loads).
- Fully compliant HACCP digital control: when temperature exceeds critical limits, acoustic and visual alarms are activated. Up to two months of event are kept in memory.
- Prearranged to fit RS485 port to facilitate connection to a remote computer and integrated HACCP systems.
- Connect the product (with accessory) to the OneConnected Platform via Wi Fi or ethernet connection for a seamless remote experience. Real-time monitoring and analytics, alarm management, HACCP data management, APIs, and advanced features keep your fridge fully under control.
- Electrolux Professional Fridge Control APP make the life easier for our customers:
  - Monitor safety of preservation process thanks to HACCP data & alarms for precise control
  - Save time and easy data management having the

Sustainability

- R290 refrigerant to reduce green house and ozone depletion effects.
- Removable triple-chamber balloon magnetic gasket to improve insulation and reduce energy consumption and ease of cleaning.
- CFC and HCFC free, highly ecological refrigerant type: R290 (ecological gas in foam: cyclopentane). Hydrocarbon refrigerant gas R290 for the lowest environmental impact (GWP=3), to reduce green house and ozone depletion effects.
- Extra insulation: 90mm body insulation to minimize energy dispersion.
- Fitted with 90 mm thickness of cyclopentane insulation for best insulating performance (thermal conductivity: 0,020 W/m*K) and lowest environmental impact (GWP=3).
- Hot gas automatic evaporation of defrost water.

Included Accessories

• 3 of Kit 1/1 grey rilsan grid and 2 side runners for refrigerated counters	PNC 881109

Optional Accessories

• 1/1GN grey rilsan grid for refrigerated counters	PNC 881107	❑
• 2 side runners for 1/1 GN ecostore refrigerated counters	PNC 881108	❑
• Kit 1/1 grey rilsan grid and 2 side runners for refrigerated counters	PNC 881109	❑
• 1/1 GN plastic container, H=65 mm	PNC 881110	❑
• 1/1 GN plastic container, H=100 mm	PNC 881111	❑
• 1/1 GN plastic container, H=150 mm	PNC 881112	❑
• Lock for refrigerator/freezer counters with 3 compartments - h700mm (can be used in kit for Marine conversion)	PNC 881243	❑
• Kit to support 2 GN1/6 containers for cut-out saladette	PNC 881256	❑

The company reserves the right to make modifications to the products without prior notice. All information correct at time of printing.

2026.11.20

Digital Undercounter ecostore HP Premium Refrigerated Counter - 440lt, 3-Door on wheels and with UK plug

Front

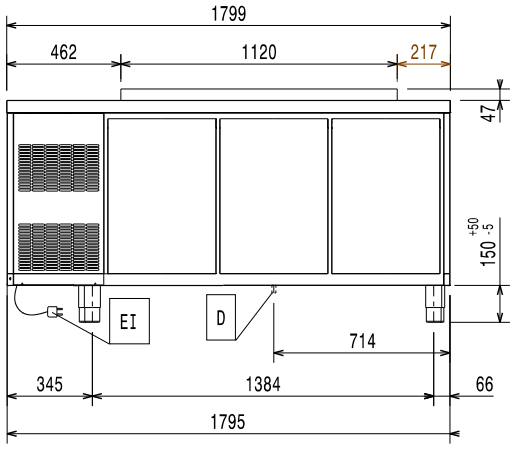

Side

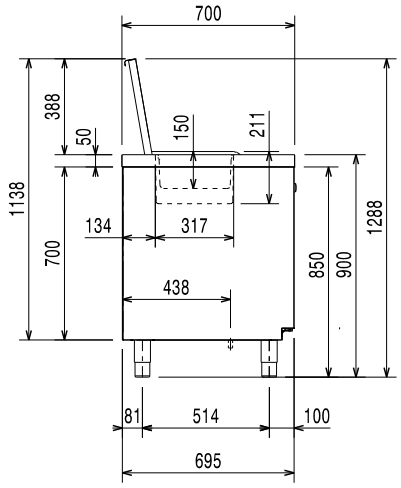

EI = Electrical inlet (power)

Top

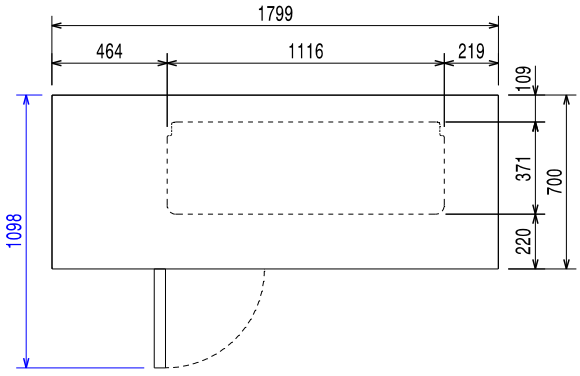

Electric

Supply voltage:	220-240 V/1 ph/50 Hz
Electrical power max.:	0.25 kW
Defrost Power:	0.22 kW
Plug type:	UK-13A

Key Information:

Net Volume:	227 lt
Door hinges:	
External dimensions, Width:	1799 mm
External dimensions, Depth:	700 mm
External dimensions, Height:	905 mm
Internal Dimensions, Width:	1252 mm
Internal Dimensions, Depth:	560 mm
Internal Dimensions, Height:	550 mm
Net weight:	130 kg
Shipping volume:	1.51 m^3
Depth with doors open:	1110 mm
Height adjustment:	-5/50 mm
Gross capacity:	440 lt

Refrigeration Data

Control type:	Digital
Refrigeration power at evaporation temperature:	-10 °C
Min/Max internal humidity:	40/85
Operating temperature min.:	-2 °C
Operating temperature max.:	10 °C
Compressor power:	1/4 hp
Operating mode:	Ventilated
Insulation:	90 mm (Cyclopentane)

ISO Certificates

ISO Standards:	ISO 9001; ISO 14001; ISO 45001; ISO 50001

Sustainability

Current consumption:	1.8 Amps
Refrigerant type:	R290
GWP Index:	3
Refrigeration power:	320 W
Refrigerant weight:	70 g
Energy Class (EU Reg. 2015/1094):	
Yearly and daily energy consumption (EU Reg. 2015/1094):	
Climate class (EU Reg. 2015/1094):	
Energy Efficiency Index-EEI (EU Reg. 2015/1094):	

The company reserves the right to make modifications to the products without prior notice. All information correct at time of printing.

2026.11.20